Sacramento Metropolitan Fire District

Fire Prevention Bureau

3012 Gold Canal Drive · Rancho Cordova, CA 95670 · Phone (916) 859-4330 · Fax (916) 859-3717

KURT P. HENKE
Fire Chief

SACRAMENTO METROPOLITAN FIRE DISTRICT					
FIRE PREVENTION STANDARD					
STANDARD TITLE:	**Fire Apparatus Access Roads**				
STANDARD NUMBER:	3	EFFECTIVE DATE:	09/07/03	REVISION DATE:	06/08/12

OBJECTIVE

The following policy was developed to meet the minimum requirements for Fire Apparatus Access Roads identification, maintenance and enforcement in Sacramento Metropolitan Fire District. The California Fire Code (CFC) gives local fire jurisdictions the authority to establish and maintain such fire lanes. This policy is developed to provide a method of implementing such requirements to provide and maintain access to and around all buildings for the purpose of conducting emergency operations.

These regulations shall apply whenever the local fire jurisdiction determines the need to establish and maintain fire access roads.

PROCEDURE

I. The members of the Fire District shall be responsible for the determination of the need and approval of a fire lane. Developers shall be responsible for the construction and identification of all new fire lanes in accordance with this policy. Owners and managers shall be responsible for the maintenance of fire lanes and their respective signs.

II. Fire Lane Determination

A. Any roadway required to provide emergency access to any portion of a facility or any portion of an exterior wall of the first story of the building that is located more than 150 feet from fire apparatus access as measured by an approved route around the exterior of the building or facility.

Exception: Except for buildings housing high piled stock, buildings fully protected with automatic fire sprinkler systems shall have fire equipment access lanes to within 150 feet of all building openings on an exterior wall.

B. A fire lane is any roadway leading from a public way to, adjacent to, and or surrounding a building of which roadway has been designated for emergency operations use by the local fire jurisdiction.

C. The CFC states, "Fire apparatus access roads shall have an unobstructed width of not less than 20 feet and an unobstructed vertical clearance of not less than 13'6".

1. May be granted by the Chief for splitting a fire apparatus roadway with a divider adjacent to a public street at a distance of not less than 30 feet from said street and both sides a minimum of 16 feet width.

2. Fire lanes serving group "U" occupancies of 500 square feet or less area with 60-foot side yards on all sides may be all weather surface twelve (12) feet in width.

3. Fire lanes are not required to group "U" occupancies of 120 square feet or less in area with 60 foot side yards on all sides.

D. Fire lane determination is the sole responsibility of the Fire District and property owners shall not designate and identify any roadway on their property as a fire lane without prior fire district approval.

E. Access roadway width shall be determined by measuring from the flow line to flow line of roadways that have curbs. When roadways do not have curbs then measurements shall be from the edge of the all weather surface of the roadway, excluding the header or edge boards.

III. Specifications

A. Fire lanes shall be a minimum clear width of twenty (20) feet and provide emergency access to within one hundred and fifty (150) feet of all portions of a building.

B. Fire lanes adjacent to a building shall have the clear access portion a minimum of ten (10) feet from the building along their entire length.

C. Fire lanes provided for aerial ladder/truck rescue operations around buildings 4 or more stories in height shall have their clear access portion from a distance of thirty (30) for the closest portion of the fire lane to a distance of fifty (50) feet for the most distant portion of the fire lane in respect to the building perimeter walls.

D. Turns in fire lanes shall have a minimum turning radius of 50 feet outside and 25 feet inside. Required turn radius may increase for fire lanes provided for aerial operations.

E. Fire access lanes in excess of 150' in length shall have an approved fire equipment turn-around within 50' of any dead end. The shape and dimensions of this required turn around shall be at a minimum those shown in Figure 1: A, C, D, and E for commercial properties and subdivisions. Figure 1: B1 and B2 are only for private roads with a maximum of four dwellings.

F. Fire access lanes shall be built to bear a minimum of 18,000 pounds and meet Sacramento County Public Works Standards for roadways.

IV. Parking

ACCESS ROADWAY WIDTH:	PARKING RESTRICTIONS ON ROADSIDE:
Less Than 28'	No parking either side
28' to 35'	Parallel parking one side only
Over 35'	Parking allowed both sides

V. Identification of Fire Lanes

A. When it is determined by the SMFD that a "No Parking – Fire Lane" designation is required on the access roadway, proper methods within this policy shall be used for identification.

B. The following methods of fire lane identification are taken from Section 22500.1 of the California Vehicle Code and one of the three methods presented below must be present when issuing a citation for a fire lane violation.

1. Posting of a sign immediately adjacent to, and visible from, the designated place clearly stating in letters not less than one inch in height that the place is a fire lane.

2. By outlining or painting the pavement with red paint and, in WHITE color, marking the pavement with the words "NO PARKING - FIRE LANE" clearly visible from a vehicle.

3. By a red curb or red paint on the edge of the roadway upon which is clearly marked the words "NO PARKING - FIRE LANE".

VI. SMFD Sign Requirements

A. Signs, curb markings, or pavement markings are required to be provided on any street, at any curb, or in any location in a publicly or privately owned or operated off-street parking facility designated as a fire lane.

B. All sign and curb markings are to be installed and maintained by the property owner.

C. "NO PARKING – FIRE LANE" shall be the acceptable terminology on all red curbing and sign in restricted areas.

D. Detailed plans shall be submitted, approved, and site inspections performed prior to identifying fire lane areas.

E. All raised curbs in "NO PARKING – FIRE LANE" areas shall be painted RED with acceptable red curb paint and lettered with letters of 3" height and ¾" stroke. Such markings shall be spaced 25 feet center to center or at least once on each short red curb. See example attached for red curbs of different construction, (see Figure 2A & 2B).

F. The identification of fire lanes without adjacent curbs shall be done with approved pavement paint as follows:

G. The fire lane shall be outlined with approved red paint with a stripe six inches in width.

H. The words "NO PARKING - FIRE LANE" shall be painted across the fire lane every 25' alternating direction in respect to the traffic flow. The color of the paint shall be white. The lettering shall be a minimum of 6" in height with a minimum 1" stroke.

I. Signs markings fire lanes are to be installed as the attached drawings 3A & 3B. Spacing of such signs shall be within three feet of each end of a curbed fire lane and spaced a maximum of 50' apart thereafter.
    1. In addition, one sign is required for each island adjacent to a fire lane or access road if the road width is twenty feet or less.

    2. Signs shall face incoming vehicular traffic or both ways if traffic may come from two different driveways.

    3. Signs shall be installed as shown on the attached sheet. (Fig. 3C)

VII. Gates across fire lanes shall be approved. Plans shall be submitted and approved prior to construction. See Perimeter Fencing Standard FPS 444.303 and Sacramento County Ordinance SCC 1378.

A. All gates shall be operable with the use of a KNOX key.

B. Fire lanes shall not be blocked with posts in the ground. These posts accumulate dirt and are later not removable.

C. All gates shall be signed on each side. "NO PARKING – FIRE LANE" letters shall be 1-inch in height with ¼ inch stroke, (See Figure 3C).

D. All fire access lane gates shall open 20 feet clear centered on the fire lane.

Ray Iverson, AC/Fire Marshal

FIGURE 1

MINIMUM TURNAROUND STANDARDS

Private Property Only

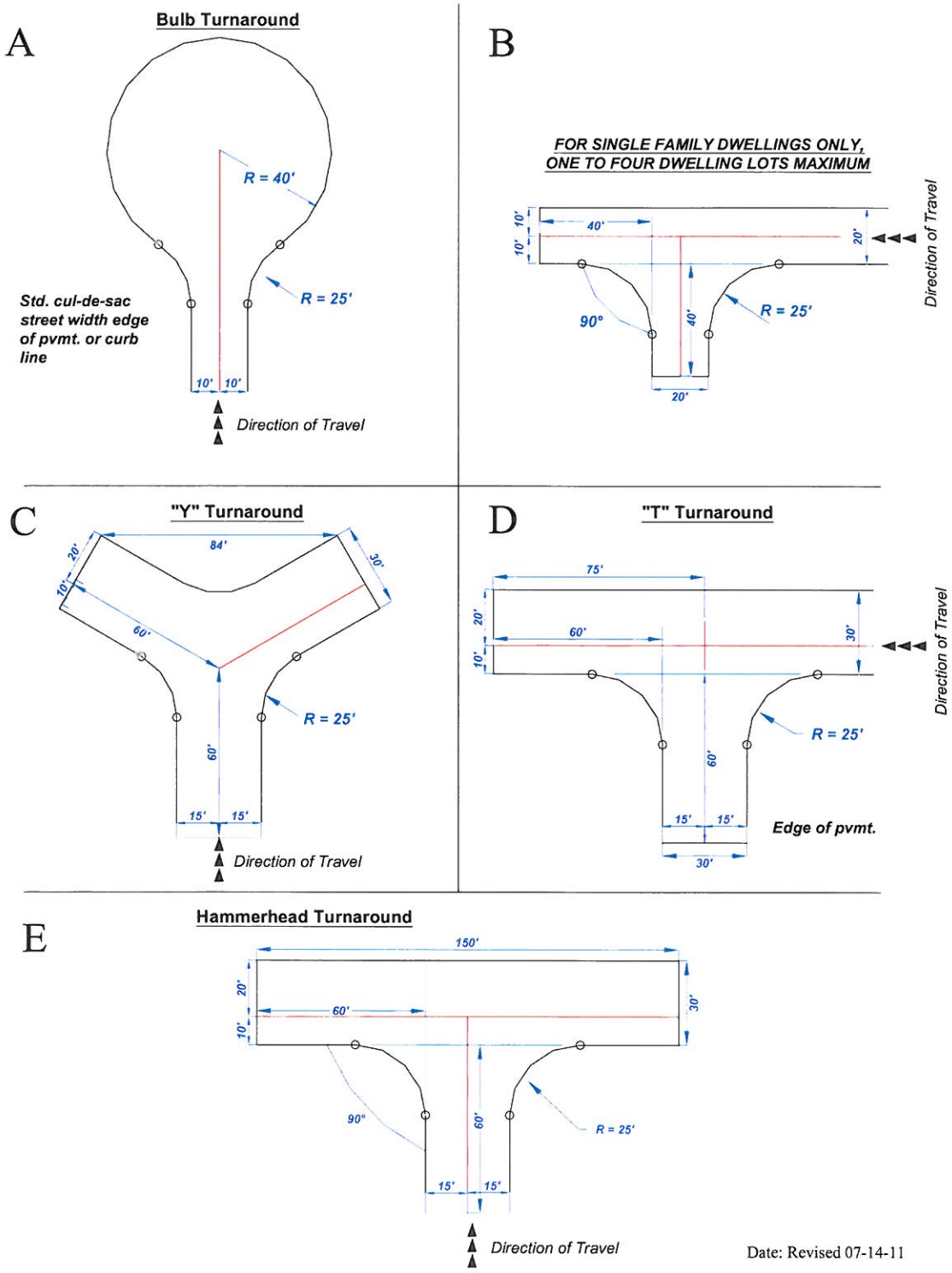

Date: Revised 07-14-11

FIGURE 2 A & B

The following are requirements for approved methods of signage design, location and dimensions.

(1) Curbs Marking Fire Lanes

The standards for curb marking are indicated below:

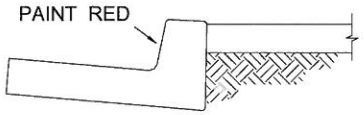

STANDARD CURB

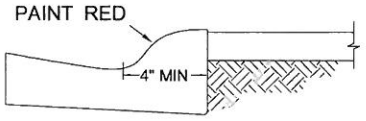

CURB LETTERING

All raised curbs in "NO PARKING" areas shall be painted RED with acceptable red curb paint and lettered to the above standards. "Lettering shall be 3" high, white and have a ¾" stroke." Markings to be located every 25 feet.

FIGURE 3A

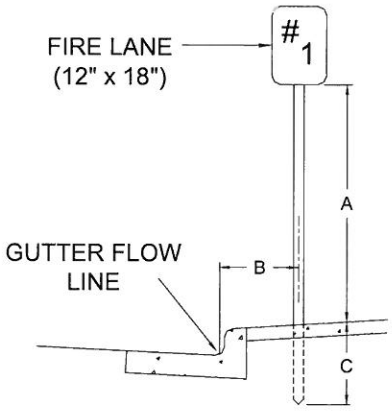

POST INSTALLATION

A - 7' IN SIDEWALK OR PEDESTRIAN AREAS.

B - 18" WITH STANDARD CURB, 24" WITH ROLLED CURB TO CENTER OF POST.

C - 24" MINIMUM EMBEDMENT.

NOTE: Signs may be mounted on existing posts or buildings, if post or building is no more than 24" from curb or edge of road surface.

FIGURE 3B

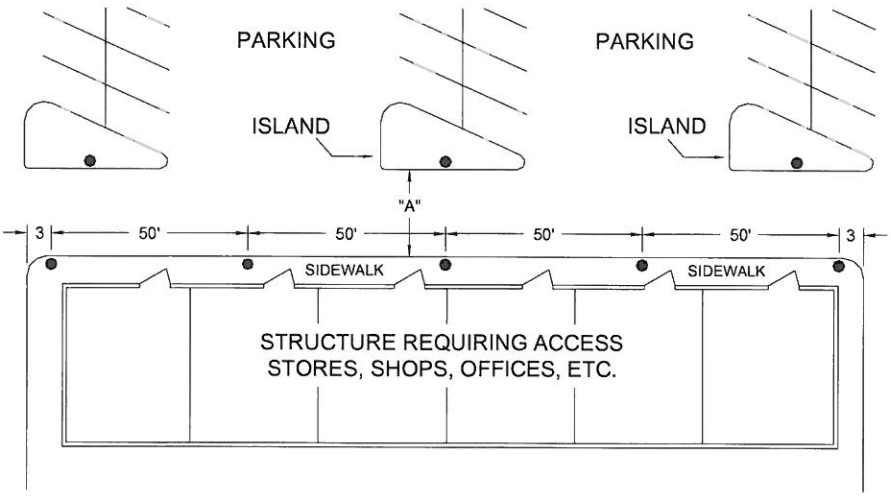

FIGURE 3C

ALL DIMENSIONS ARE IN INCHES

R 27 SUFFIX	SIZE	BORDER WIDTH	MARGIN WIDTH	LETTER SIZE SERIES & STROKE WIDTH					COR. RAD.
				LINE 1	LINE 2	LINE 3	LINE 4	LINE 5	
- 1.1	12 X 18	1/4	1/4	3 ½ B - .49	3 B - .42	2 ¼ B - .33	2 ¼ B - .33	3/8 F - .08	1 ½

R 27 SUFFIX	SIZE	DIMENSIONS											
		A	B	C	D	E	F	G	H	I	J	K	L
- 1.1	12 X 18	1 ½	15	2-3/8	7/8	1-1/8	5 ½	9-3/4					

White BACKGROUND WITH Red BORDER & SYMBOL

3/8" DIA. HOLES

SIGN

Reflectorized Material
Aluminum Sign

APPROVED: